BRUCE

MATERIALS PROCESSING SOLUTIONS

intelligent washing solutions

› FOR OVER 65 YEARS



HARDOX® WEARPARTS

BSP BRUCE SPAREPARTS

BRUCE WEARPARTS

BRUCE
MATERIALS PROCESSING SOLUTIONS

intelligent washing solutions



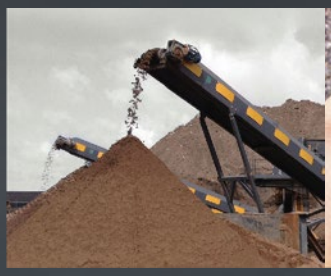

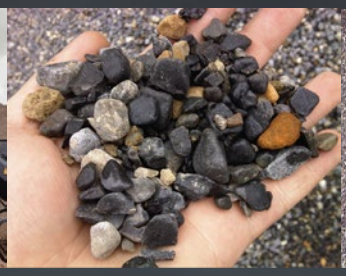



Disclaimer: The information in this document is for reference only and can be changed without notice at any time. Please note, any performance information is for guidance only and is not guaranteed.

CE

With over 65 years experience in the Materials Processing Industry Bruce provide turnkey modular washing systems.





BRUCE WashPod

Scrubs/Washes/Separates

Complete Self-Contained Wash Plant with only the footprint of a 40ft Container.



Easily transportable with fast on-site set-up

FEATURES & BENEFITS

- Smallest working footprint of any complete Washplant
- Fastest on-site set up time
- Factory wired & tested
- Easily transportable with no need for specialist transport
- Aggregate scrubbing, trash removal, aggregate rinsing & sizing plus sand washing in one net package
- Production of 4 washed products: 3 aggregates & 1 sand
- Fully galvanised walkways & steps
- Branded components throughout
- Radial or integrated Stockpile Conveyors
- Fully automated control system

WHAT'S ON BOARD

- Double or Triple Deck Washing Screen (10' x 5')
- Dewatering Screen (8' x 4')
- Twin Shaft Logwasher
- Twin Cyclones
- Clean Water Tank, Sand Collection Tank and Dirty Water Tank
- Complete with integrated pumps and control panel
- Trash Screen

APPLICATIONS

- Sand & Gravel
- Recycled C&D waste
- Aggregate
- Road Sweepings
- Crushed Rock
- Utilities Waste
- Railway Ballast
- Drainage Medium
- Contaminated Soils
- Recycled Muckaway

TPH

- Aggregate product up to 100tph
- Sand 50tph

OPTIONS

- Radial or integrated Stockpile Conveyors
- Feed Hopper
- Feed Conveyor



BWR-TL
Modular Wash Plant

The Bruce BWR-TL is a modular washing system that can be adapted to suit various feed material and site requirements

FEATURES & BENEFITS

- Fully mounted washing system
- Multifunctional: Easily adaptable to suit various material washing requirements
- Compact unique design with minimal footprint
- Highly productive and efficient Screens with high frequency motors
- Complete with automated control system or wired to mains system control panel
- Hardox Wearparts supplied as standard to ensure extended wear life
- Range of screen sizes to suit application & tonnages

WHAT'S ON BOARD

- Integrated Pre-Screen (Optional)
- Twin Shaft Logwasher
- Trash Screen
- Single, Double or Triple Deck Washing Screen
- Modular Skid Frame
- Sand Plant (Optional)
- Conveyors (Optional)
- Wastewater Treatment (Optional)

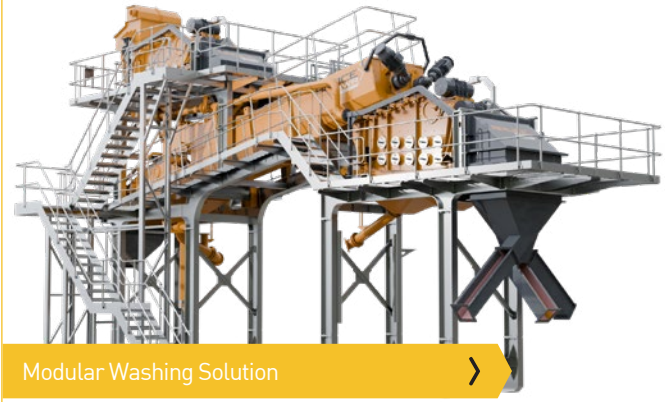

Modular Washing Solution ›

APPLICATIONS

- Sand & Gravel
- Recycled C&D waste
- Aggregate
- Road Sweepings
- Crushed Rock
- Utilities Waste
- Railway Ballast
- Drainage Medium
- Contaminated Soils
- Recycled Muckaway

TPH

- Built to customer specification

OPTIONS

- Modular Feeding System
- Sand Plant
- Water Treatment
- Modular Components (ranging in specification)



MOB-E-WASH
Mobile Washing System

The Bruce Mob-E-Wash offers flexibility that static plants cannot match.

Excels in situations that require temporary installation, campaign washing and quick turnaround projects.



FEATURES & BENEFITS

- Electric drive mobile washing system
- Quick set-up
- Unique compact design
- Tri-axle chassis
- Highly productive and efficient screens with high frequency motors
- Control panel with power-safe plug & play connectivity - touch screen HMI display
- Hardox® Wearparts supplied as standard
- Multifunctional to suit various material washing requirements
- Fully galvanised fold-away maintenance platforms and access steps

APPLICATIONS

- Sand & Gravel
- Recycled C&D waste
- Aggregate
- Road Sweepings
- Crushed Rock
- Utilities Waste
- Railway Ballast
- Drainage Medium
- Contaminated Soils
- Recycled Muckaway

WHAT'S ON BOARD

- Belt Feed Conveyor
- Twin Shaft Logwasher
- Trash Screen
- Two or Three Deck Washing Screen
- Stockpile Conveyors

OPTIONS

- Associated Fines Recovery Bolt-On System
- Power supply - 75 kVA generator oversized to 100 kVA



BWS
Cyclone Sand Processing Plant

The Bruce BWS Sand Plant maximises fines recovery to produce high quality dewatered sand products.



FEATURES & BENEFITS

- Can produce one or two grades of material
- Maximises fines recovery
- Sand moisture content reduction
- Rubber lined slurry pump(s) & Hydro cyclone(s)
- High frequency Dewatering Screen with polyurethane media & side wall protection
- Rubber lined cyclone collection tank
- Overflow weir discharge system
- Mechanical diverter plate at screen discharge to blend product
- Adjustable chute under cyclone discharge box for blending coarse and fine product
- Fully automated electrical control panel
- Self-regulating sump with pump protection float system
- Hardox® and rubber lined wear parts

APPLICATIONS

- Sand & Gravel
- Fines Recovery

OPTIONS

- Single or twin product
- Dual / Twin Wash Plant
- Integrated Bucketwheel (BWSRB)
- Spray bars on Dewatering Screen
- Boiler Box for dry feed application
- Stockpile Conveyors

TPH

- 40 / 60 / 120 / 200 models



BWSRB Bucketwheel Sand Processing Plant

Featuring a bucketwheel for enhanced recovery and moisture control, the Bruce BWSRB Sand Plant delivers high-quality dewatered sand.



FEATURES & BENEFITS

- Twin bucket wheel with variable speed control
- Can produce one or two grades of material
- Maximises sand recovery
- Sand moisture content reduction
- Rubber lined slurry pump(s) & hydro cyclone(s)
- High frequency Dewatering Screen with polyurethane media & side wall protection
- Rubber lined cyclone collection tank
- Overflow weir discharge system
- Mechanical diverter plate at screen discharge to blend product
- Adjustable chute under cyclone discharge box for blending coarse and fine product
- Fully automated electrical control panel
- Self-regulating sump with pump protection float system
- Hardox® and rubber lined wear parts

APPLICATIONS

- Sand & Gravel
- Fines Recovery

OPTIONS

- Single and twin product machines
- Spray bar on Dewatering screen
- Boiler box for dry feed
- Stockpile Conveyors

TPH

-120 / 150 / 200 models



Did you know?
Bruce only use Hardox® for all their wearparts

HARDOX® WEARPARTS

BRUCE
MATERIALS PROCESSING SOLUTIONS



BWD
Bucketwheel Dewaterer

The Bruce BWD Dewaterer range is a cost effective way to remove water from washed material.

FEATURES & BENEFITS

- Long settling tank & recovery spiral for increased fines recovery
- High capacity variable speed bucket wheel fitted with interchangeable drain plates
- Overflow weirs to control fines recovery
- Rubber lined slurry intake boxes
- Adjustable weir discharge
- Variable speed hydraulic controls
- Robust & durable build quality

APPLICATIONS

- Sand & Gravel
- Recycled Sand
- Marine Dredged Sand
- Fines Recovery

OPTION

- Electric hydraulic powerpack

TPH

- 90 / 120 / 150 models available





BWTL
Twin Shaft Logwasher

The Bruce Twin Shaft Logwasher is ideal for attrition (material-on-material) scrubbing of aggregate.

FEATURES & BENEFITS

- Robust build for heavy duty applications
- Extended machine life due to interchangeable Hardox® wearparts
- Adjustable water discharge weir system
- Controlled input water flow
- Can be adapted to suit or complement an existing system

APPLICATIONS

- Sand & Gravel
- Recycled C&D waste
- Aggregate
- Road Sweepings
- Crushed Rock
- Utilities Waste
- Railway Ballast
- Drainage Medium
- Contaminated Soils
- Recycled Muckaway

OPTIONS

- Supplied as a separate modular unit or as an integral part of a Bruce washing system
- Inlet and discharge chutes tailored to specific requirements

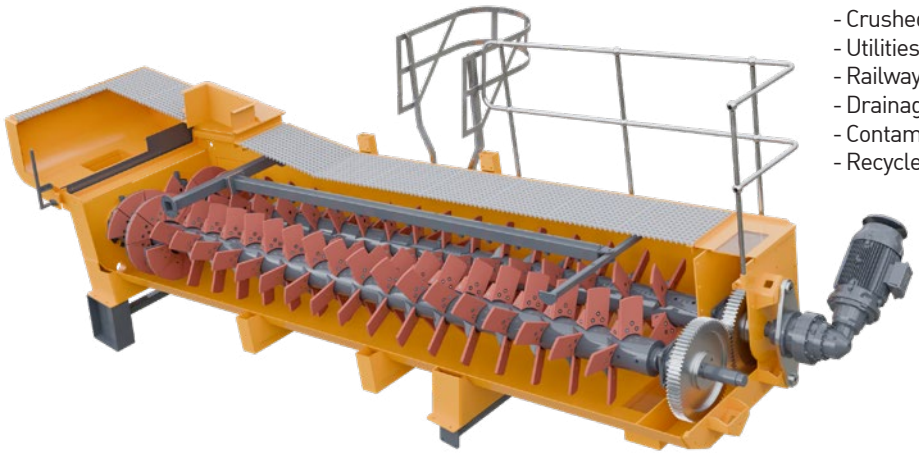

Did you know?
Bruce are up and running over 65 years

BRUCE
MATERIALS PROCESSING SOLUTIONS



BWT Thickener Tank

Designed to clarify and recycle water plus concentrate sludge, the Bruce Thickener Tank (BWT) is an efficient solution to wastewater treatment.



FEATURES & BENEFITS

- Fully automated
- Inlet Chamber: located on the side of the tank. Delivery intake of wastewater and addition of polymer binding agent
- Integrated feed well in centre of tank encourages downward settlement of sludge to central discharge point
- Integrated conditioning rakes
- Perimeter weir: capture of recovered clean water
- Backwash facility to clear any potential blockages
- Fully galvanised stairs, walkway & fixed bridge
- Support structure
- Centrifugal sludge pump
- Full system control panel

APPLICATIONS

- Sand & Gravel
- Recycled C&D Waste
- Aggregate
- Road Sweepings
- Crushed Rock
- Utilities Waste
- Railway Ballast
- Drainage Medium

OPTIONS

- Available in 6 / 8 / 10 / 12m diameter models
- Flocculent Station / Polyelectrolyte Plant
- Cabin / Housing for Flocculent Dosing Station
- Clean Water Ballast Tank
- Sieve Bed / Filter Screen

Materials Processing Solutions all over the world...



PROVIDING SOLUTIONS FOR OVER 65 YEARS

BRUCE WEARPARTS

HARDOX® WEARPARTS

BW-FRD
Washing System

The Bruce BW-FRD modular washing system integrates feeding, screening, sand washing and stockpiling into one efficient solution. With a wide range of modular configurations available, the system is designed to consistently produce high-quality clean aggregates and sand products to suit a variety of applications.

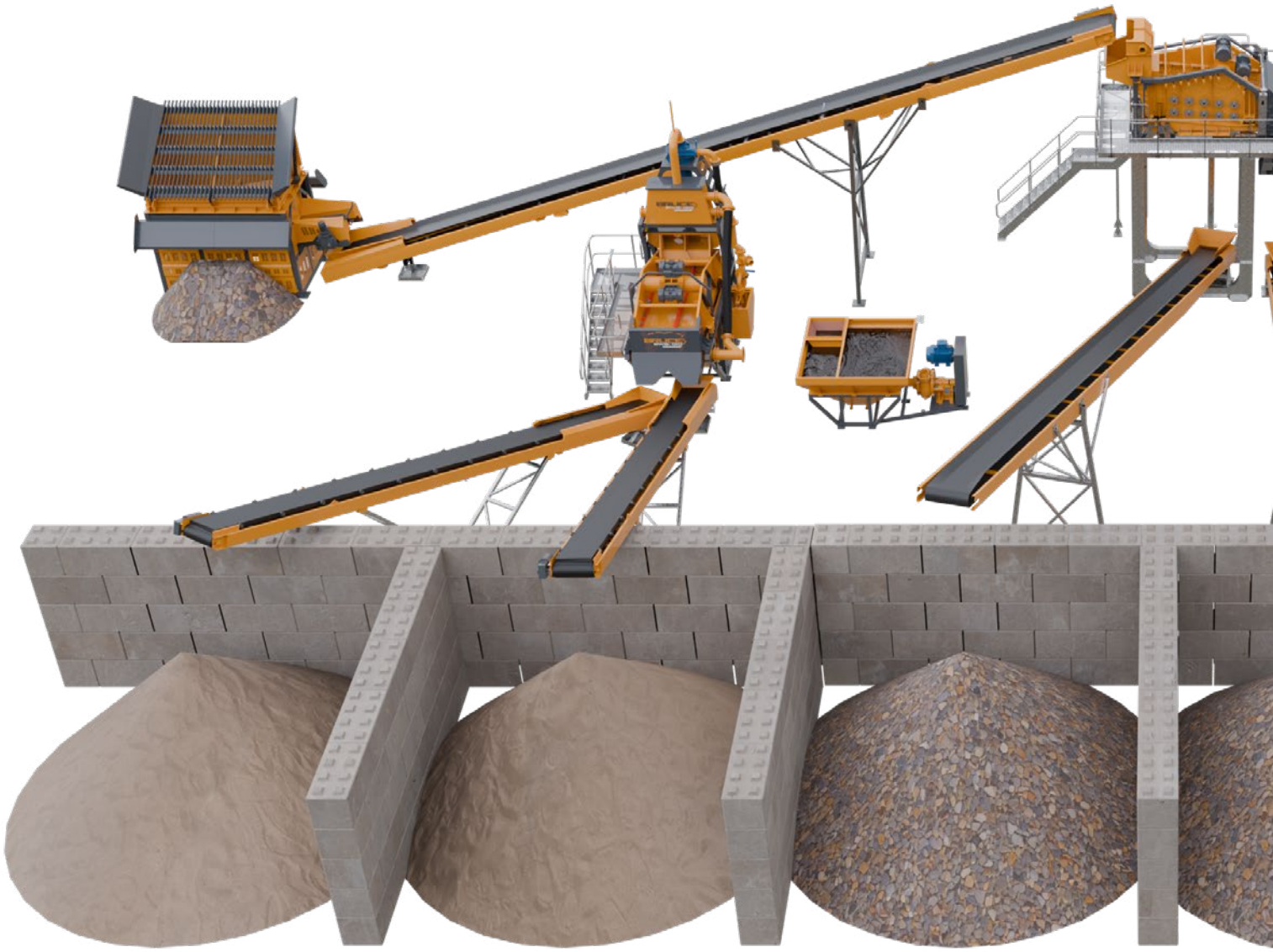

FEATURES & BENEFITS

- Up to 3 washed aggregates and 2 washed sands
- Modular design to facilitate specific customer requirements
- Intelligent design ethos ensures maximum performance and serviceability with easy access to pumps, screen media and essential components
- Production of aggregates and sand products to a desired specification
- Easily integrated with Bruce water treatment technology for complete package
- Fully galvanised access steps, walkways and guard rails
- Complete with control panel for connection direct to generator or wired to full system control panel

COMPONENTS

- Feeding
- Washing
- Screening
- Dewatering
- Stockpiling
- Water Treatment

OPTIONS

- Single, double or triple deck Washing Screen
- Single or twin product Fines Recovery Plant
- Choice of Bruce BWS, BWSRB, BWD range of fines recovery systems
- Spray bars on Dewatering Screen
- Over-band magnet including support frame and stainless steel chute on Transfer Conveyor
- Belt weigher system on Conveyors
- Removal of Stockpile Conveyors and discharge material to bays
- Can be supplied with Bruce wastewater treatment system for complete turnkey solution

Layout consists of the following:

- Belt Feed Hopper
- Infeed Conveyor
- Washing Screen
- BWS Sand Plant (Twin Product)
- Stockpile Conveyors
- Thickener Tank & Clean Water Tank
- Control Cabin



Typical BW-FRD Layout: Alternative View

Complete Modular
Wash Plant

The Bruce Modular Wash Plant is a highly adaptable, modular washing system that delivers end-to-end material processing — from controlled feeding and versatile scrubbing and screening to integrated wastewater treatment.



FEATURES & BENEFITS

- Modular Washing System to facilitate specific customer requirements
- Highly productive and efficient screens with high frequency motors
- Maximum performance and serviceability with easy access to pumps, screen media and essential component
- Control panel
- Hardox® wear parts supplied as standard
- Ease of transportation
- Production of aggregates and sand products to a desired specification
- Multifunctional to suit various material washing requirements
- Fully galvanised maintenance platforms and access steps

COMPONENTS

- Feeding
- Scrubbing
- Screening
- Washing & Dewatering
- Stockpiling
- Water Treatment

OPTIONS

- Single, double or triple deck Washing Screen
- Range of Washing Screen sizes to suit application and tonnages
- Pre-Screen
- Logwasher length
- Fines recovery - single or twin product
- Choice of fines recovery system - BWS, BWSRB or BWD
- Over-band magnet
- Belt weigher
- Stockpile Conveyors or bays
- Wastewater treatment

Layout consists of the following:

- Belt Feed Hopper
- Infeed Conveyor
- BWR - Pre-Screen, Logwasher, Tash Screen, Washing Screen (Triple Deck)
- BWS Sand Plant (Twin Product)
- Stockpile Conveyors
- Wastewater Treatment & Control Cabin





Typical Modular Layout: Alternative View



Modular Wash Plant
With Thickener Tank

The Bruce Modular Wash Plant delivers a comprehensive washing system – from material feeding and screening to water management – with an integrated Thickener Tank engineered to clarify, recycle and concentrate wastewater.



FEATURES & BENEFITS

- Modular Washing System to facilitate specific customer requirements
- Highly productive and efficient screens with high frequency motors
- Maximum performance and serviceability with easy access to pumps, screen media and essential component
- Control panel
- Hardox® wear parts supplied as standard
- Ease of transportation
- Production of aggregates and sand products to a desired specification
- Multifunctional to suit various material washing requirements
- Fully galvanised maintenance platforms and access steps

COMPONENTS

- Feeding
- Scrubbing
- Washing
- Screening
- Dewatering
- Stockpiling
- Water Treatment

OPTIONS

- Single, double or triple deck Washing Screen
- Range of Washing Screen sizes to suit application and tonnages
- Pre-Screen
- Logwasher length
- Fines recovery - single or twin product
- Choice of fines recovery system - BWS, BWSRB or BWD
- Over-band magnet
- Belt weigher
- Stockpile Conveyors or bays
- Wastewater treatment

Layout consists of the following:

- Scalper
- Infeed Conveyor
- BWR - Pre-Screen, Logwasher, Trash Screen, Washing Screen (Triple Deck)
- BWS Sand Plant (Single Product)
- Stockpile Conveyors
- Wastewater Treatment & Control Cabin

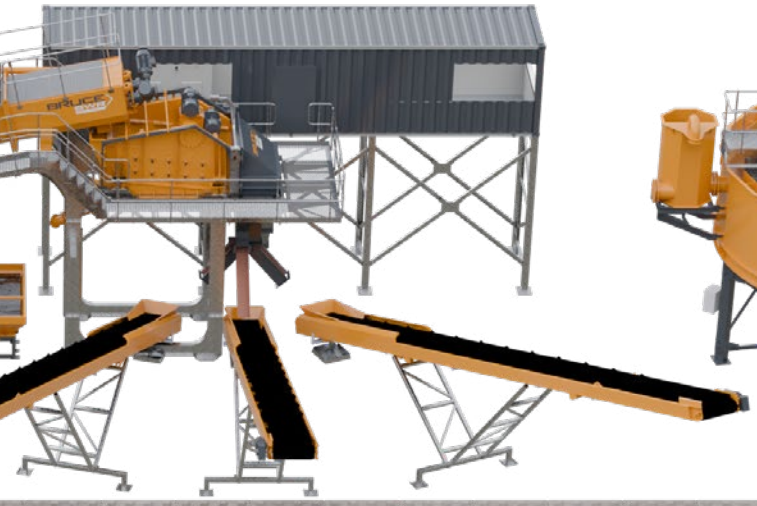



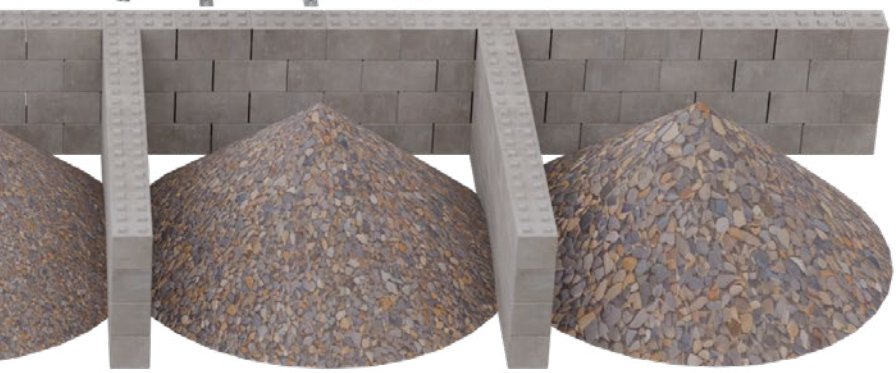

Typical Modular Layout: Alternative View



WashPod
Washing System

The Bruce WashPod is a fully containerised, modular washing system that combines scrubbing, screening, sand washing and water management in a compact unit for efficient material processing with easy set-up and relocation.



Typical WashPod Layout: Alternative View



FEATURES & BENEFITS

- Modular Washing System to facilitate specific customer requirements
- Highly productive and efficient screens with high frequency motors
- Maximum performance and serviceability with easy access to pumps, screen media and essential component
- Control panel
- Hardox® wear parts supplied as standard
- Ease of transportation
- Production of aggregates and sand products to a desired specification
- Multifunctional to suit various material washing requirements
- Fully galvanised maintenance platforms and access steps

COMPONENTS

- Feeding
- Scrubbing
- Washing
- Screening
- Dewatering
- Stockpiling

OPTIONS

- Single, double or triple deck Washing Screen
- Over-band magnet
- Belt weigher
- Stockpile Conveyors or bays
- Wastewater treatment

Layout consists of the following:

- Belt Feed Hopper
- Infeed Conveyor
- Compact Logwasher
- Trash Screen
- Washing Screen (Triple Deck)
- BWS Sand Plant (Single Product)
- Clean Water Tank
- Dirty Water Tank
- Stockpile Conveyors





Feed Hopper & Belt Feeder

Bruce Hoppers & Belt Feeders are designed for feeding quantities of material evenly and consistently to the next stage of processing.

FEATURES & BENEFITS

- Large capacity heavy duty Hoppers and Belt Feeders
- Conform to ISO safety requirements with safety guards and side skirting fitted as standard
- Fixed variable speed drives
- Interchangeable belt scraper segments
- Discharge Conveyors up to 1500mm wide

OPTIONS

- Various Hopper capacities available
- Hardox® lined
- Open top or grid with bofor bars
- Hydraulic Tipping Grid with remote control
- Electric or hydraulic drive

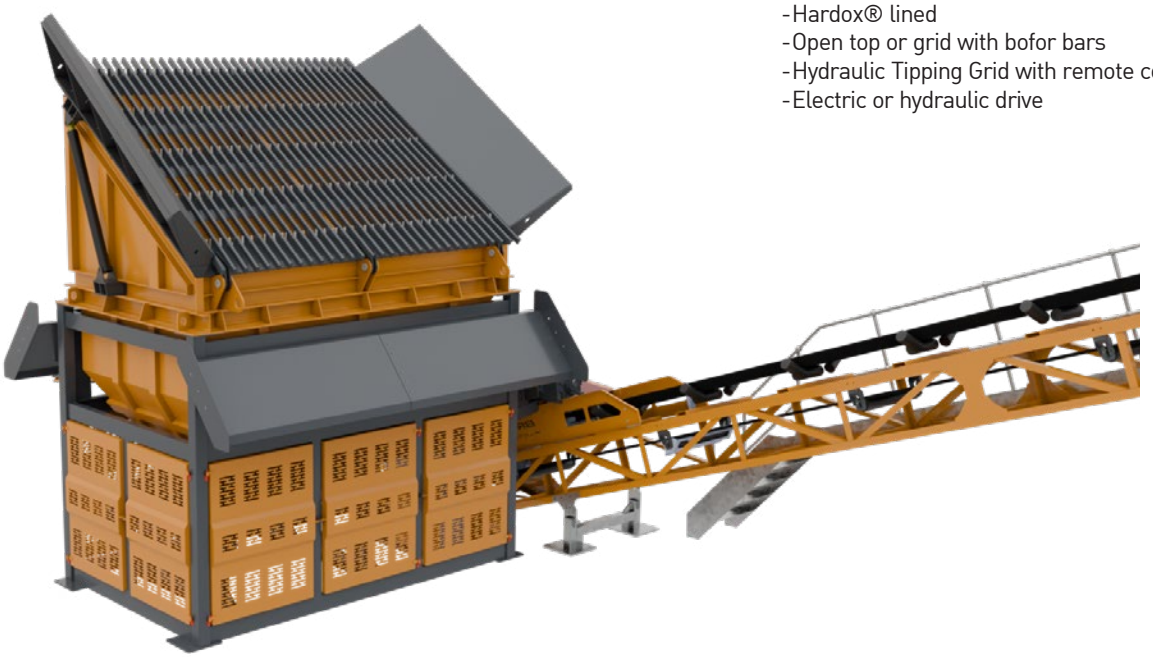



BRUCE Scalper

Extremely versatile, robust machine, maximising efficient feeding with compact scalping and screening.



FEATURES & BENEFITS

- Electric Drive
- Machine can be adapted to produce 2-3 products
- Multiple screening media types available – Grizzly Bars, Cascade Fingers, Punch Plate and Woven Wire Mesh
- Counterdirectional Cleaning Conveyor
- Robust Apron Feeding Conveyor complete with Hardox® Shoe Plates
- Oscillating Screen Mounts
- Cardan Shaft Synchronised Drive
- Efficient feed point for site vehicle
- Durability with Hardox® Wearparts
- Quick set-up
- User friendly control system
- Maintenance access on both sides of the machine

APPLICATIONS

- Recycled C&D Waste
- Aggregate
- Demolition Waste
- Topsoil

Did you know?
Bruce's first wash plant was installed in 1974 and is still running today

BRUCE
MATERIALS PROCESSING SOLUTIONS

Washing Screens

FEATURES & BENEFITS

- High acceleration rate to ensure optimum screening
- Screens driven by low maintenance vibrating motors
- Heavy duty single motor base using a fabricated and machined construction
- Modular skid mounted base
- Spray bars with "Vari-Spray" nozzles
- Hardox® lined discharge chutes
- Variable screen angle 5 - 20°

OPTIONS

- Single, double and triple deck screens available
- Screen media options; polyurethane, rubber or wire screen mats plus finger decks available
- Reverse phase braking system

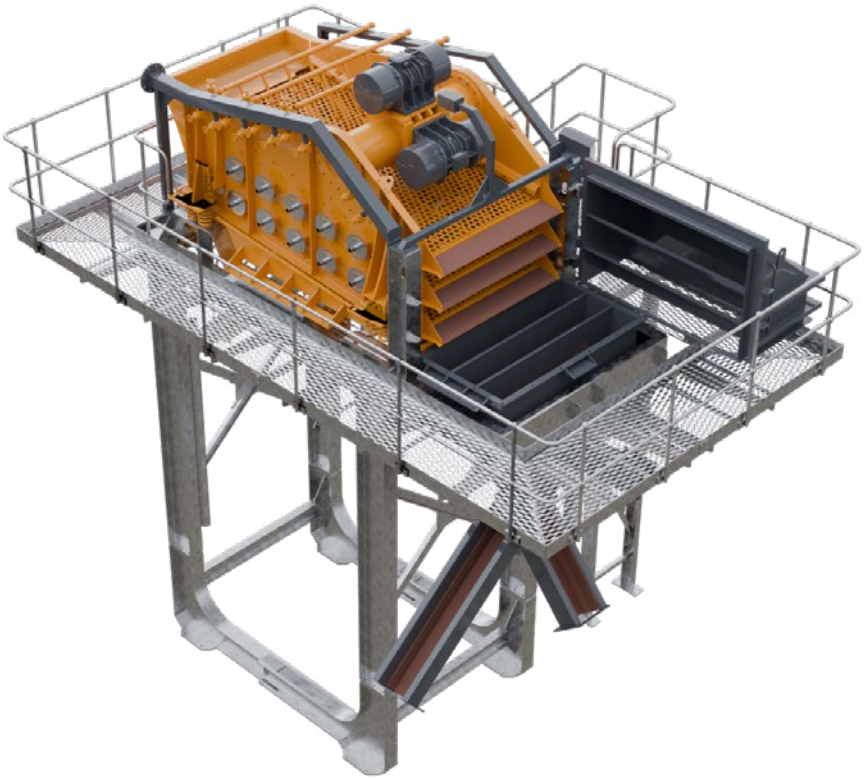

Dewatering Screens

FEATURES & BENEFITS

- Modular polyurethane media
- Can be supplied as a separate unit or incorporated into existing plants
- High frequency low amplitude vibration for effective dewatering of fine solids

OPTIONS

- Rubber lined sump
- Spray bars
- Single or twin product

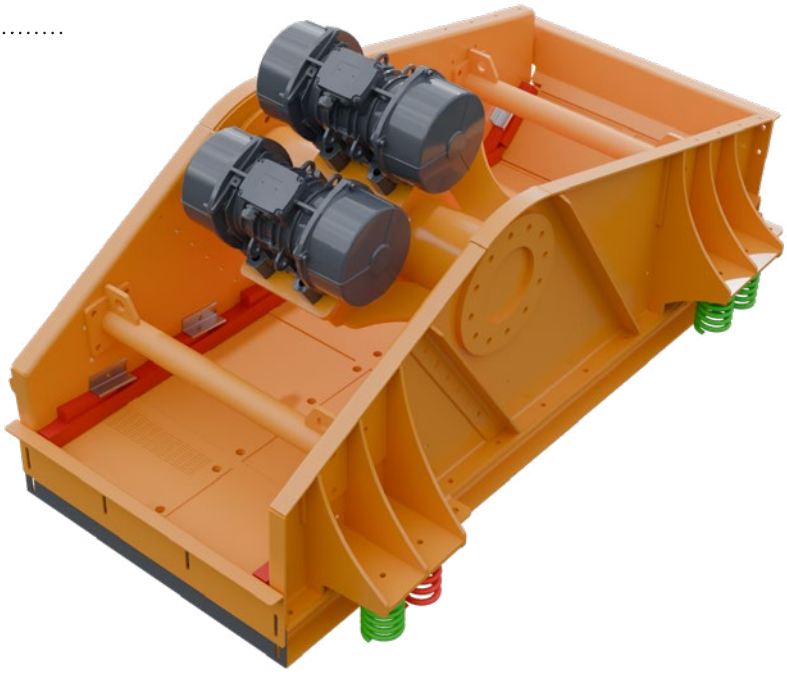

Lattice Conveyors

FEATURES & BENEFITS

- Hardox® lined feed boot
- Belt scrapers
- Enhanced guarding
- ISO accredited safety standards

OPTIONS

- Galvanised access steps and walkways
- Chevron belt
- Dust encapsulation covers
- Belt scales
- Electric or hydraulic drive
- Range of lengths and belt widths
- Over-band magnet
- Radial or static
- Boiler box



Mobile Conveyors

FEATURES & BENEFITS

- Hardox® lined feed boot
- Belt scrapers
- Enhanced guarding
- ISO accredited safety standards

OPTIONS

- Chevron belt
- Dust encapsulation covers
- Belt scales
- Electric or hydraulic drive
- Range of lengths and belt widths
- Over-band magnet
- Radial or static



Bruce
Feeding

ELECTRO - MAGNETIC FEEDERS

Electro-magnetic vibrating Feeders are designed with a single drive unit incorporating variable control to ensure a consistent material feed.

ELECTRO - MECHANICAL FEEDERS

The Bruce extensive range of mechanical vibrating Pan Feeders are designed for light to heavy duty applications within the materials handling industries. The Feeders are driven by twin electric motors with an option of variable feed control.



FEATURES & BENEFITS

- Hardox® liners
- Variable speed control
- Quiet operation
- Low maintenance
- Low energy consumption

OPTIONS

- Hopper
- Conveyors
- Various pan sizes
- Available in 40 - 600t feed rate

Bruce
Screening

VIBRATING GRIZZLIES

Bruce Grizzlies have an extremely robust fabricated design.



FEATURES & BENEFITS

- Hardox® liners
- Variable speed control
- Quiet operation
- Low maintenance
- Low energy consumption

OPTIONS

- Available in 40 - 600t feed rate
- Single, double or triple stepped decks

BRUCE
WEARPARTS

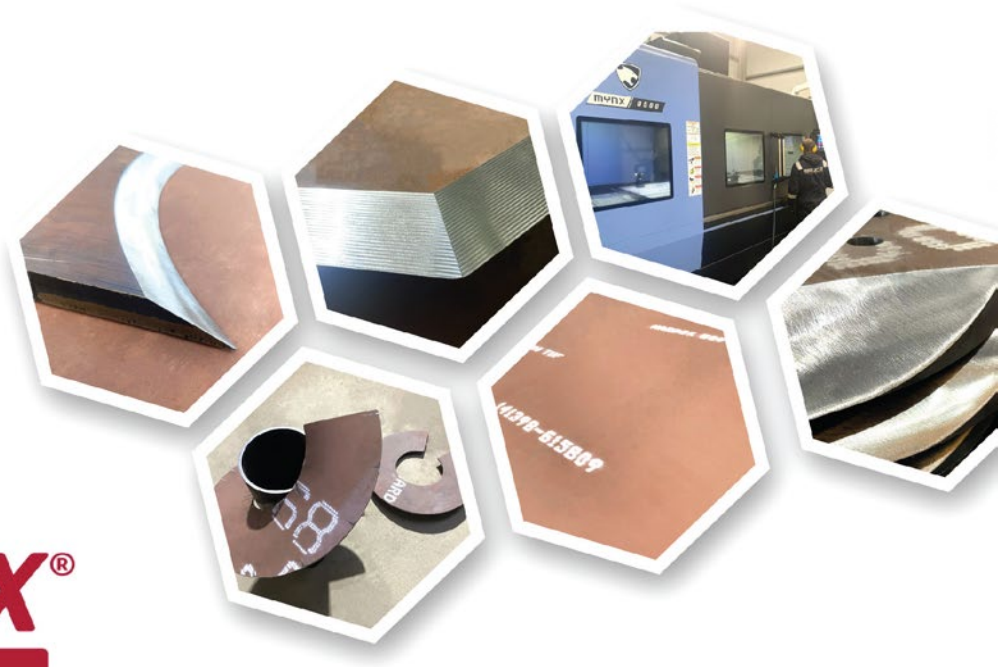

HARDOX®
WEARPARTS

BSP BRUCE SPAREPARTS

GENUINE SPARE PARTS ON DEMAND!

- Screen Media
- Springs
- Screw Flights
- Rollers
- Shafts
- Pumps
- Drive Motors
- Belts
- Cyclone Spigots
- Vibrating Motors
- Hardox Wearparts
- Bearings

Did you know?
Bruce were the first company in Ireland to manufacture Electro-Magnetic Feeders

BRUCE
MATERIALS PROCESSING SOLUTIONS

Water Treatment Partner

TECNOIDEA

Bruce Engineering are proud partners of Tecnoidea Impianti Water & Sludge Treatment Plants.

We can provide the complete solution to wastewater management including:

- Filter Press: Side-beam and Overhead Beam options
- Vertical Clarifiers/Deep Cone Thickeners
- Flocculant Stations
- Pumps
- Clarified Water Tanks



Notes

VERSION | 26/A

BRUCE

MATERIALS PROCESSING SOLUTIONS

Bruce Engineering Services (NI) Ltd.
33 Lindesayville Road
Cookstown
Co. Tyrone
BT80 8UH

T. +44 (0) 28 8676 3684
E. sales@bruce-eng.co.uk
W. www.bruce-eng.co.uk

HARDOX® WEARPARTS

BRUCE SPAREPARTS

BRUCE WEARPARTS

